DURAKUT 6000 2D VFD/SERVO DICER

Precision Cuts of the Highest Quality

CARRUTHERS®

THE NEXT GENERATION CARRUTHERS DICER HA

Just like our AdvantEdge series, our NEW DuraKut line is designed and built in the USA for complete cutting versatility of fresh, vacuum tumbled, crust frozen or cooked products into cubes or strips. Equipped with VFD or servo drives, the DuraKut 2D dicer's powerful and precise indexing movements deliver the very best final product appearance. DuraKut's robust durable design with tool free disassembly, including removal of the conveyor belt and spiral knife, reduces change-over and sanitation tear down times for different cut sizes. DuraKut frames are built to the latest sanitary standards with open stainless steel channels and no tubular framing. With continuous flow processing and high throughputs, DuraKut models are controlled via Allen-Bradley's newest MobileView™ HMI for the most user-friendly and intuitive interface. DuraKut — CHANGING THE FOOD INDUSTRY ONE CUT AT A TIME.

DURAKUT BENEFITS / FEATURES

- Made in USA with centrally located parts, field service, and technical support.
- VFD driven belts via drum motor (enclosed motor and gear drive).
- Optional Servo drive with stainless steel inline planetary gearbox for precision cubing and strip cutting. IP69K rated components.
- Integrated product discharge belt conveys finished product directly to dump buggy or conveyor.
- Redesigned spiral knife reduces fines and product movement during and after slicing along with tool free removal and installation.
- 12.5" (317.5mm) wide belt features tensionless belt take-up mechanism for easy belt installation and tool free removal.
- Handles product up to 5" (127mm) in height at any length, without the need for pre-cutting. Dice or strip any cut size from .1181" (3mm) up to 4" (101mm).
- Positive drive conveyors eliminate need for belt tensioning = no belt slippage.
- Continuous flow processing design allows for smooth integration into any processing line. No need for batching.
- Smart intuitive Allen-Bradley MobileView™ tethered interface with user-friendly icons for easy operation.
- Open design and fewer parts reduce teardown, sanitation and reassembly time.
- Gang knife cartridge can be easily mounted and removed with tool free disassembly.
- Hinged covers and door panels with no external hinges.
- EWON Wi-Fi capable (standard on servo).
- CE Compliant
- PackML Compliant

PackML an OMAC standard

MADE IN THE USA

Rockwell Automation Equipment Builder Partner

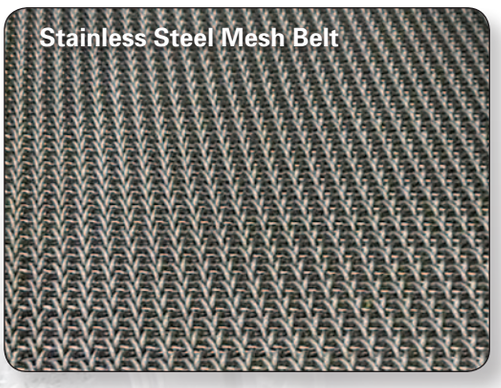

S ARRIVED.

Unique cutting action produces accurate, consistent sizing without ripping or tearing of product.

Intuitive Allen-Bradley MobileView™ tethered interface

Angled surfaces for water runoff

Open hygienic design

Integrated product discharge belt

Tool free removal of gang knife cartridge

ERGONOMIC PARTS CLEANING CART

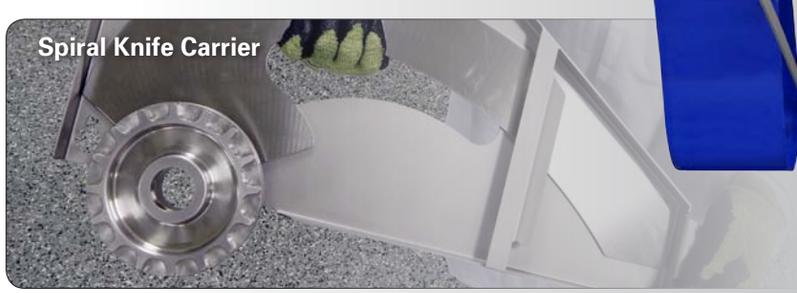

Detailed and Intuitive Controls Interface

TECHNICAL DIAGRAM

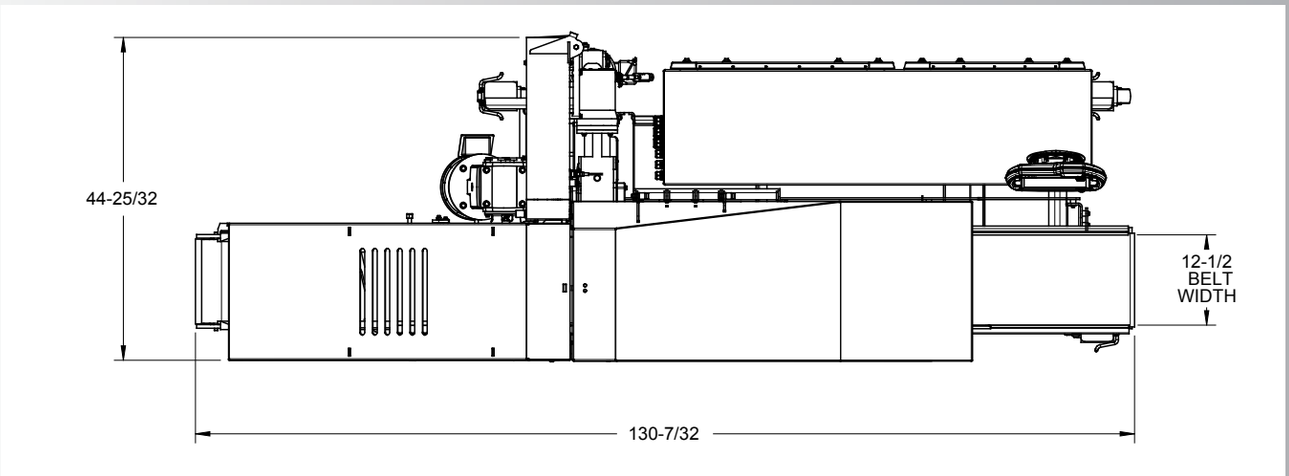

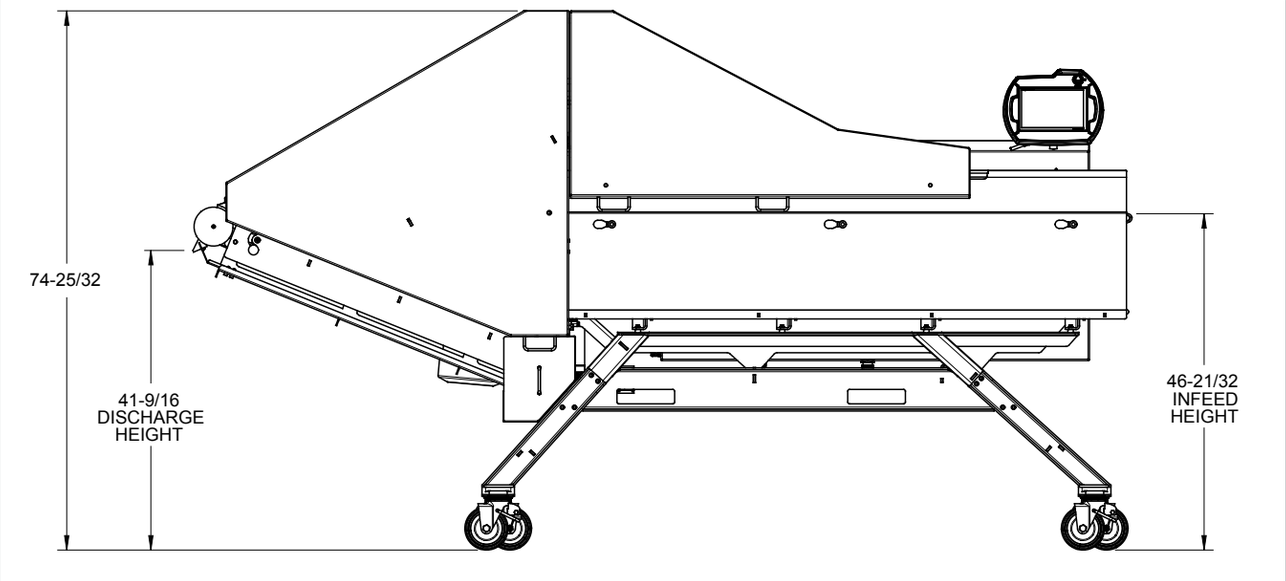

CARRUTHERS®

MARLEN INTERNATIONAL
A DURAVANT COMPANY

4780 NW 41st St, Ste. 100 • Riverside, MO 64150

Tel 913.888.3333 | Toll Free 800.862.7536 | Fax 913.888.6440 | email: sales@marlen.com | www.marlen.com

DURAVANT

THE DURAVANT FAMILY OF COMPANIES

www.duravant.com

MARLEN INTERNATIONAL | ARPAC | HAMER-FISCHBEIN | FISCHBEIN INTERNATIONAL | MESPACK | FMH CONVEYORS