QUENDAL MIXER/BLENDER

- Allen-Bradley programmable controls
- Solid or grating style lid cover available with proximity sensor for safety
- Paddle or ribbon agitators, standard or overlapping
- Variable speed agitators
- Capacities from 500 lbs (225 kg) to 20,000 lbs (9,000 kg)
- Built to AMI Sanitary Equipment Design Principles

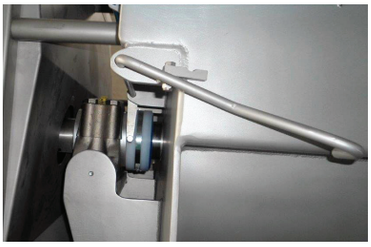

Easy-release shaft seals for easy cleaning

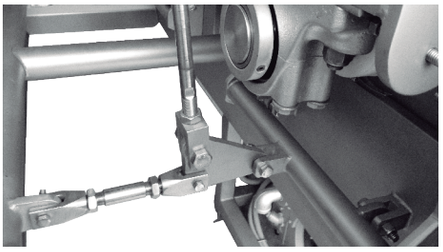

Discharge door mechanical locking system guarantees closed door during utility interruptions

By

MARLEN INTERNATIONAL
A DURAVANT COMPANY

Call Marlen toll free 800.862.7536 or 913.888.3333

www.quendalfoodtech-machinery.com

Quendal
foodtech machinery

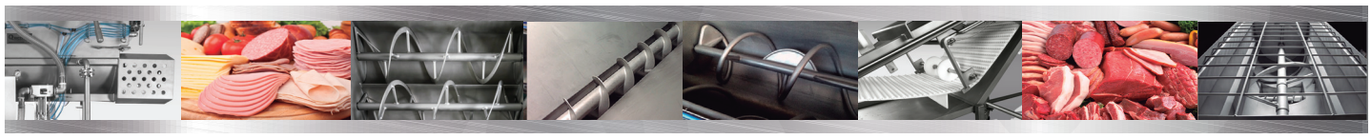

QMB Turbo Mix System

STANDARD DIMENSIONS:

Capacity		Volume		Motor (x2)	
kg	Lbs.	m³	ft³	HP	kW
225	500	0.4	14	3	2
350	750	0.65	23	3	2
450	1,000	0.85	30	5	4
700	1,500	1.25	44	7.5	6
900	2,000	1.55	55	7.5	6
1,000	2,200	1.75	62	10	7.5
1,400	3,000	2.2	78	15	11
1,800	4,000	3.05	108	20	15
2,300	5,000	3.85	136	20	15
2,700	6,000	4.15	147	25	19
3,600	8,000	5.35	189	30	22
4,500	10,000	6.45	228	40	30
5,700	12,500	7.8	275	50	38
7,000	15,000	9.05	320	60	45

Capacities are based on 880 kg/m³ (55 lbs/ft³)

	A	B	C
Capacity kg (lbs.)	Length mm (in.)	Width mm (in.)	Raised grating ht. mm (in.)
225 kg (500 lbs.)	2,235 mm (88")	1,270 mm (50")	2,083 mm (82")
350 (750)	2,286 (90")	1,321 (52")	2,184 (86")
450 (1,000)	2,616 (103")	1,270 (50")	2,413 (95")
700 (1,500)	2,667 (105")	1,702 (67")	3,327 (131")
900 (2,000)	3,073 (121")	1,575 (62")	2,997 (118")
1,000 (2,200)	2,997 (118")	1,524 (60")	3,124 (123")
1,400 (3,000)	3,556 (140")	1,778 (70")	3,531 (139")
1,800 (4000)	3,556 (140")	1,854 (73")	3,124 (123")
2,300 (5,000)	3,912 (154")	1,880 (74")	3,581 (141")
2,700 (6,000)	3,912 (154")	1,930 (76")	3,200 (126")
3,600 (8000)	4,242 (167")	2,032 (80")	3,150 (124")
4,500 (10,000)	4,34"3 (171)	2,235 (88")	3,404 (134")
5,700 (12,500)	4,877 (192")	2,210 87")	3,378 (133")

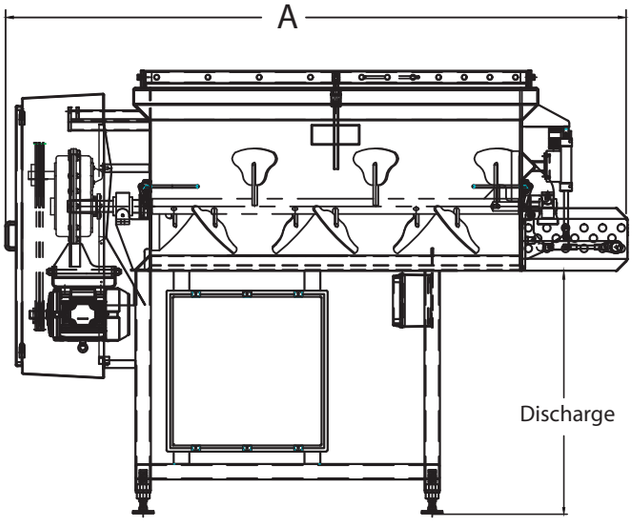

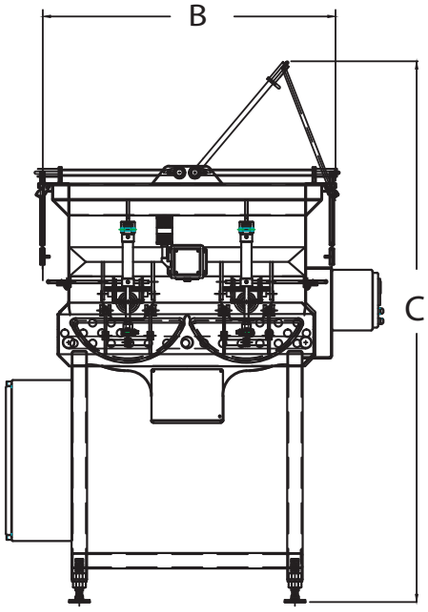

Quendal
foodtech machinery